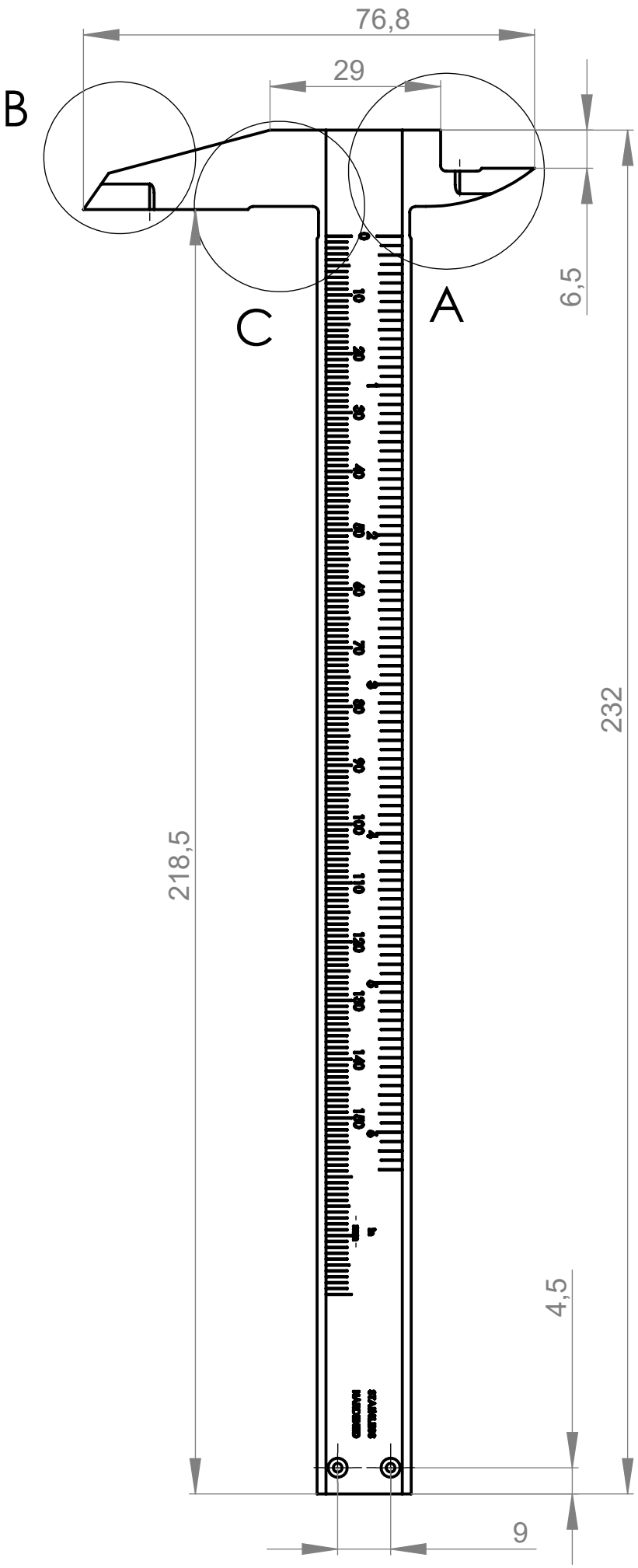

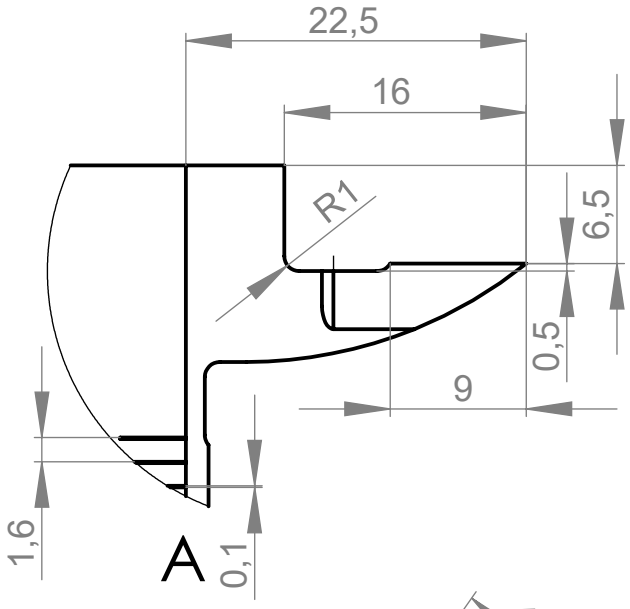

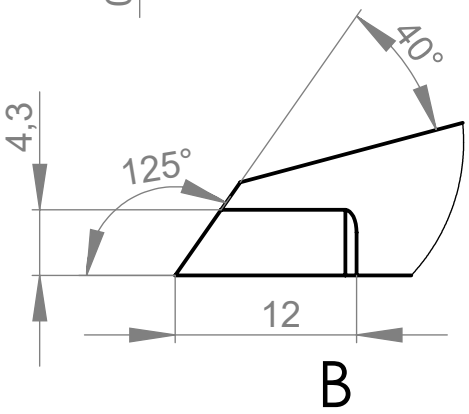

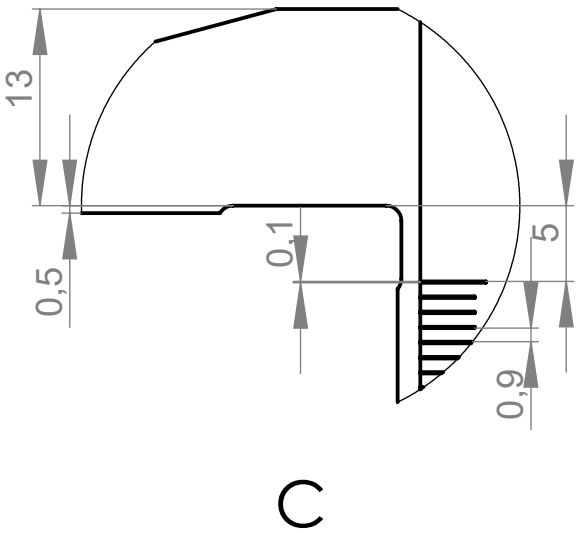

SOLIDWORKS Educational Product. For Instructional Use Only.